ALL-IN-ONE BUS NODE

UNIGATE® IC

- 32 DIL
- Norm compliant
- Certified
- Programmable
- Designed & manufactured in Germany

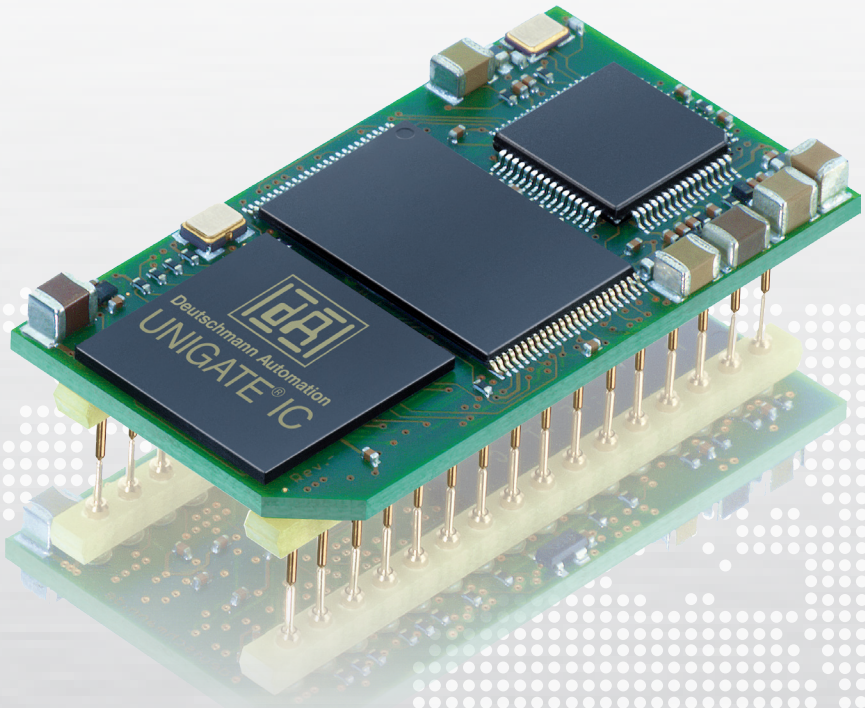

READY-TO-INSTALL FOR

BACnet® | CANopen | CC-Link
DeviceNet | EtherCAT | EtherNet/IP
ETHERNET TCP/IP | Modbus | MPI
ETHERNET POWERLINK | PROFIBUS | PROFINET

INTEGRATE WITH LITTLE DEVELOPMENT EFFORT

Deutschmann
your ticket to all buses

Ready-to-install

UNIGATE® IC – Integrate without much development effort

The UNIGATE® IC is a ready to install fieldbus- respectively industrial Ethernet node in DIL 32 design. The enormous reduction of the development effort up to 70-80% holds a significant advantage in time-to-market.

The hardware development is reduced to the integration of the IC-socket and bus specific connectors.

Covering an area of only 45 x 25 mm, the module includes all necessary components such as microcontroller, Flash, RAM, Ethernet switches or fieldbus ASIC as well as octocoupler and bus driver. It can be connected to the microcontroller of the terminal device, or can operate as stand-alone.

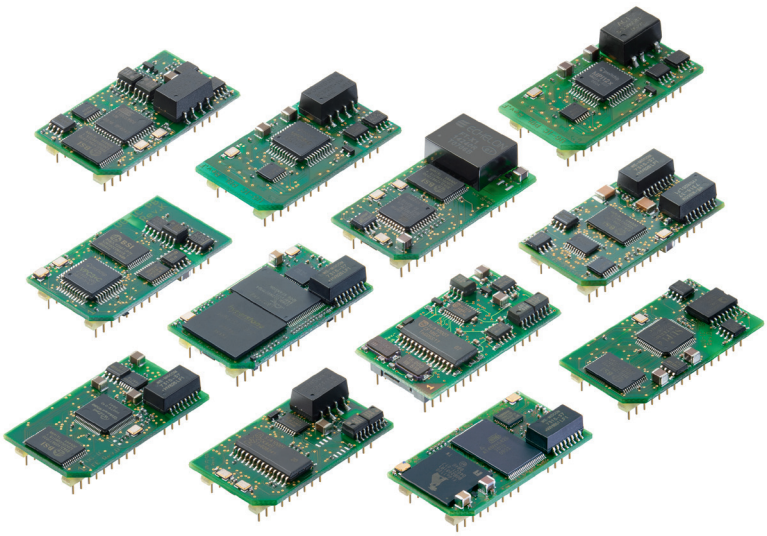

The module handles the entire bus or Ethernet traffic and relieves the terminal device processor of this non-trivial task. The protocol of the terminal device will be implemented with a script. The free of cost PC-tool “PROTOCOL DEVELOPER” generates the script and adapts it perfectly to the final product and the requirements of the bus.

Is your host working with a standard protocol such as Modbus? Then it’s even easier, because the PROTOCOL DEVELOPER has the protocols Modbus RTU / ASCII as master or slave, and also the 3964 (R) protocol with complete handshake and DLE doubling is already included in a simple script command. Changes to the firmware of the terminal are not necessary.

The hardware and software interfaces of the Deutschmann UNIGATE® IC series are standardized and functionally the same. A guarantee for the interchangeability between the different bus versions.

Design-In

Deutschmann also offers UNIGATE® IC variants as a design-in solution. Design-in allows the customer to fit the design of the module to their needs and optimize for their own system. You’re going to use our always further developed firmware.

Advantage Deutschmann – Ready-to-install

- 70-80% reduced development effort
- Time-to-Market gain
- Assembly consists of standard components
- Connection to the host processor via UART interface
- Expandable via the synchronous serial interface e.g. for
  - ‚Stand-alone‘-mode (without processor applications)
  - Shift-register connection (e.g. LED activation, read-in of switch positions)
  - Analog/digital converter (e. g. analog sensor, 4-20mA current loop)
- Easy integration into your electronics
- Adaptation of the terminal device firmware is dropped
- All active components are included besides IC PN2Port
- Integrated isolation to FB interface
- Coverage of the major fieldbus and industrial Ethernet protocols with just one development

Hardware overview

Use

The Deutschmann UNIGATE® IC is extremely well suited for the use with terminal devices out of the automation technology. It does not matter whether it is a complex control or a simple actuator or sensor. Even control components – outside the classical automation technology – can be connected to the fieldbus world or Ethernet based buses with the UNIGATE® IC.

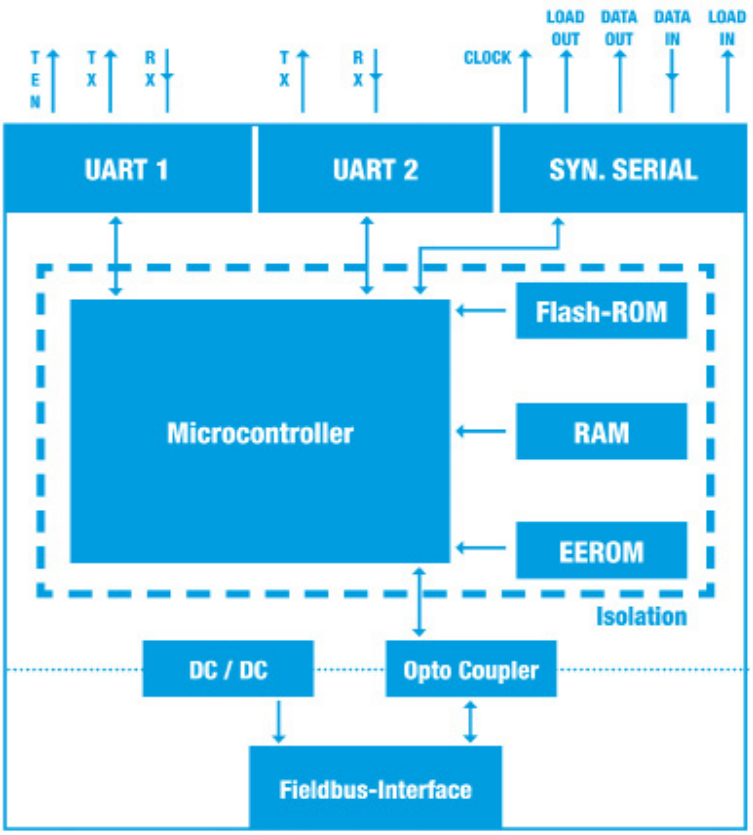

Features

The Deutschmann UNIGATE® IC provides a complete fieldbus- respectively industrial Ethernet interface (Slave). The functionality of Ethernet based models includes a FTP- and a web server.

Benefit

A key benefit of the UNIGATE® IC series is the scripting ability. As a result, changes on the terminal device are no longer required. The flexibility of the script language provides the user freedom and opportunities; from a simple transparent data transfer through generating complex protocols up to preparation of the data. Standard protocols such as Modbus RTU (Master/Slave), Modbus ASCII are included as complete script command.

Deutschmann
your ticket to all buses

Application example

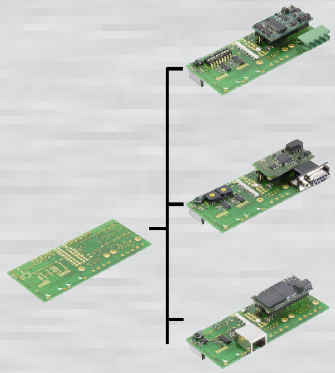

Example of a customized board. This board can be fitted for different field-buses.

Hardware overview

Stand-alone operation

The connection to terminal devices without a processor can be done via the clocked shift-register interface (synchronous serial interface / SPI). It allows the extension of the IC for digital and analog inputs and outputs through the port of shift registers, DA- or AD-converters. This way LEDs can be accessed, switch positions queried or analog signals read-in or read-out. The maximum input and output register width is each 256 bits.

Processor-connection

For the use in systems with its own microprocessor, the UNIGATE® IC is connected via a UART interface with the processor of the final product. The communication between the device processor and the UNIGATE® IC is controlled by the script. With script technology it is possible to simulate complex protocols data can be processed and cached.

The key advantage: The firmware of the terminal device does not need to be touched!

Debug interface

The debug interface of the UNIGATE® IC can be used to test a script, or for diagnostic purposes.

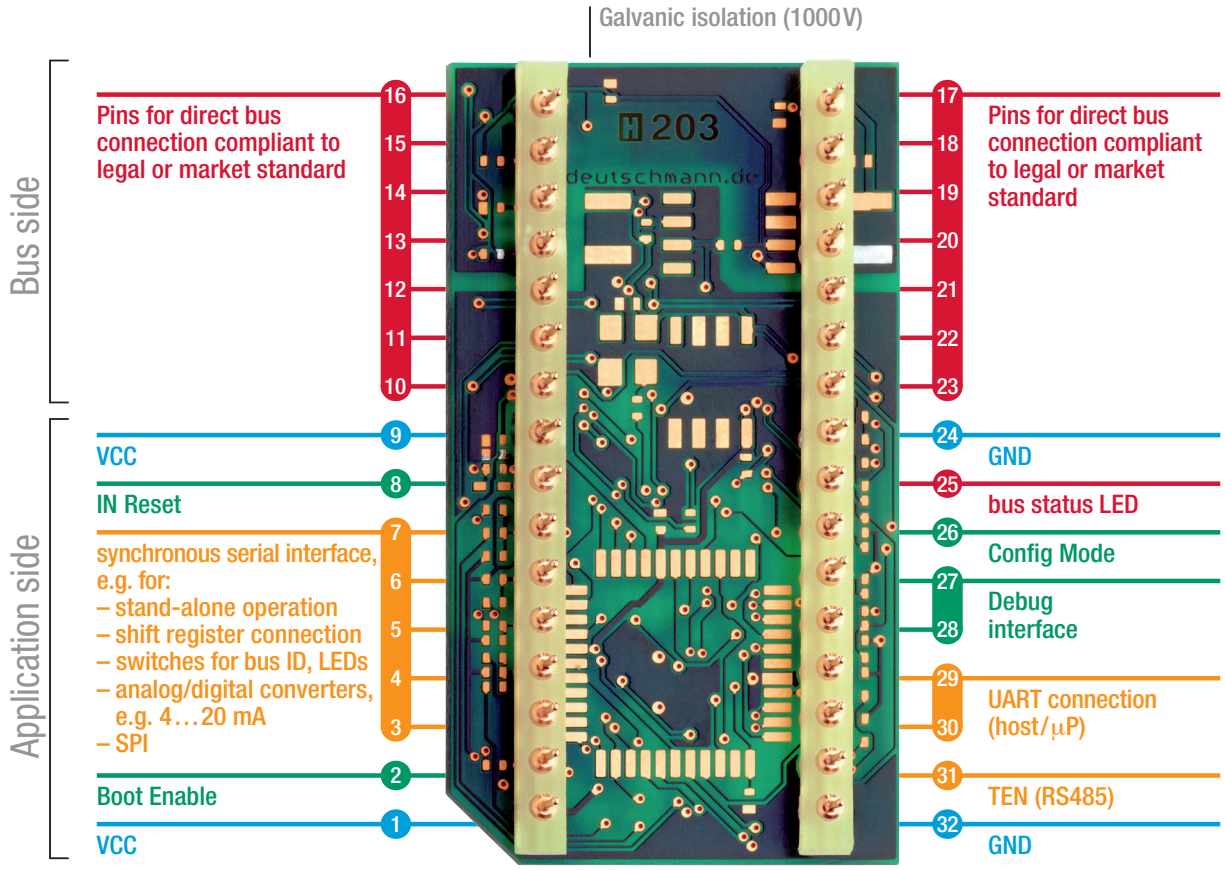

PROTOCOL DEVELOPER

Deutschmann Script language

The heart of the Deutschmann UNIGATE® / Gateway series

- Flexible solutions are needed. With the usual configuration tools for protocol converters and gateways, the user has to work with the specifications of the manufacturer. To change this unfortunate condition Deutschmann developed its own script language as early as in 1999.
- The user only needs to process the data of the bus and barely has to look after the special characteristics of the fieldbus.
- The PROTOCOL DEVELOPER supports a variety of functions to fit the received or to send data into the right “form”. Mathematics- or memory processing commands are known from other Script languages and are easy to understand implemented, even for laymen.
- Also the neatly arranged selection of examples enables a quick introduction to laymen.
- Another highlight is the included debug functionality. The common functionalities such as Single-step, running and stopping on breakpoint are available.
- Great emphasis is put on data security. You can activate special error detection routines on request.

What exactly is a script?

A script is a sequence of commands executed in a given order. A command is always a small, firmly outlined task. The script language also knows commands that control the program flow in the script, which is why you can assemble even complex processes with these simple commands.

Command groups overview

Declarations	variable declaration
Flow Control	Subfunction calls, jumps, branches
Math	Mathematical functions, data conversions
Communication	Send and receive data
Device Control	Set and read parameters. For example the baud rate for the serial interface.
Bus Specific	bus-specific values

Deutschmann
your ticket to all buses

- **Comfortable script commands**
- **Wide range of functions**
- **Marketable protocols are included as a script command**
- **Quick induction**

PROTOCOL DEVELOPER

The amount of tasks which can be handled with a script is infinite.

Scripts are imaginable which

- automatically determine a participants data at the serial interface, edit this data and then outline it in the bus
- only carry out action if the bus data is altered
- carry out timed actions
- share communication states
- exchange the data between 2 serial participants (RS485) and present the state in the bus

The script programming gives you a flexible possibility to solve your communication task. On both sides, i.e., on the RS-side and on the bus side, data can be edited, converted and arranged.

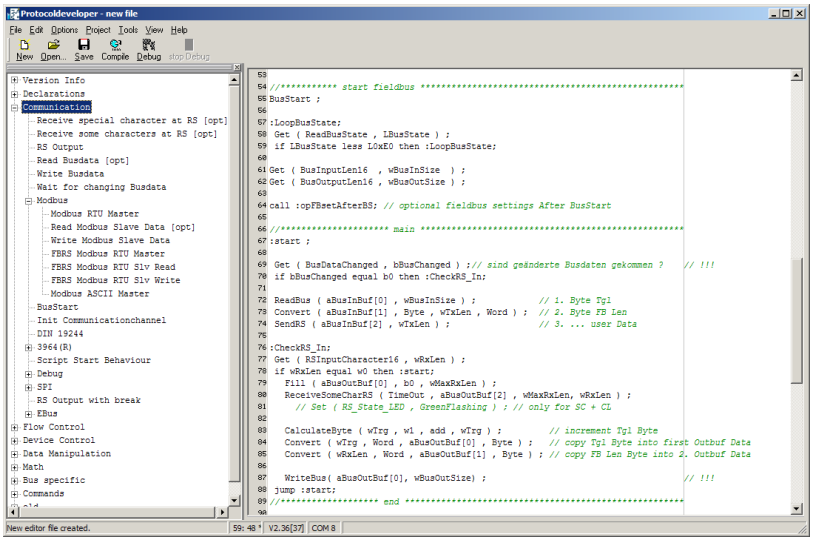

Picture 1: script example in the PROTOCOL DEVELOPER

The 1x1 of the PROTOCOL DEVELOPER

Picture one shows you an example script in the editor surface and the tree view of all available commands (Command-Tree). It is the tool for easy script generating for our script gateways, its operation is aimed on it.

In addition to programming via text commands, the Command-Tree also offers dialogue-based programming. If defined, and necessary for the correlating command, a dialogue goes through the command parameters (picture 2) and inserts the resulting command into the script.

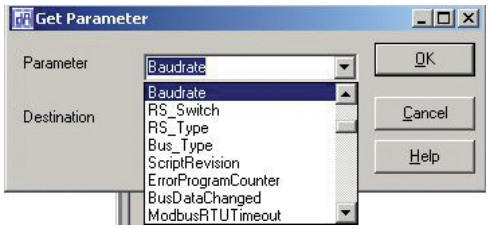

Picture 2: parameter

PROTOCOL DEVELOPER

Compile

Before a script can be loaded into a UNIGATE®, it has to be compiled. The resulting code is very storage efficient. So even extensive a script fits comfortably in the internal memory of the UNIGATE®.

The loading of a script into the device can be done directly from the PROTOCOL DEVELOPER. For serial programming a script-download tool is available.

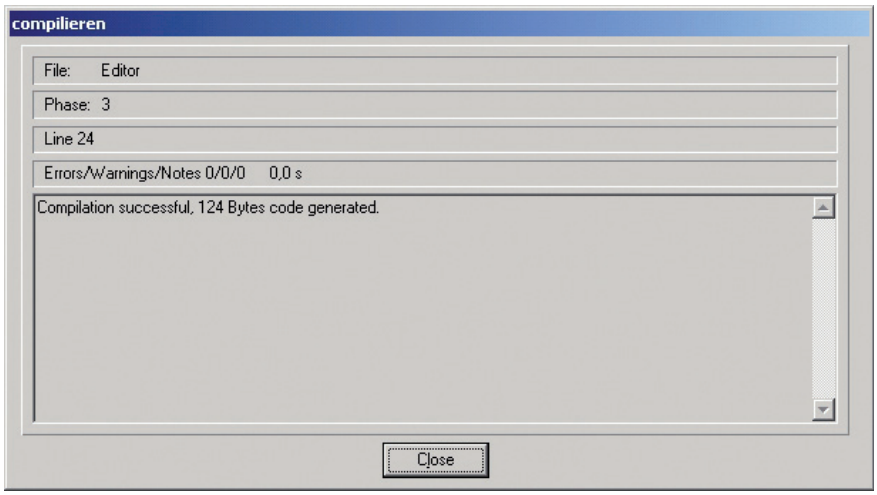

Picture 3: compilation

Debuggen

All UNIGATE® CL devices have a built-in debugging interface. A special debug software is not needed. To test even extensive scripts quickly you'll find many functions for comfortable debugging, such as

- Breakpoints
- Single-step
- Display of the variables and their values
- Error display

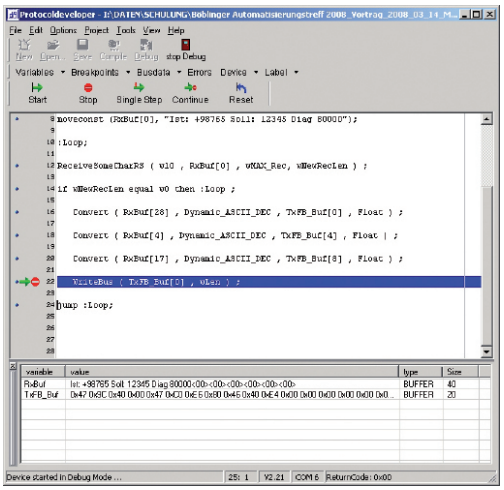

Picture 4: debug window with variables and their content

Deutschmann
your ticket to all buses

- **Integrated debug environment**
- **Convenient test of the script**
- **Memory efficient compilation of script code**
- **Example for each script command**
- **Templates for each bus variant**
- **Workshops**
- **Hotline by phone / E-Mail**

Support

The PROTOCOL DEVELOPER contains a context-sensitive help function, in which a detailed description of all script commands is included.

Templates for different tasks and bus variants can be transferred directly and adapted to your own needs.

Picture 5: extract of the templates

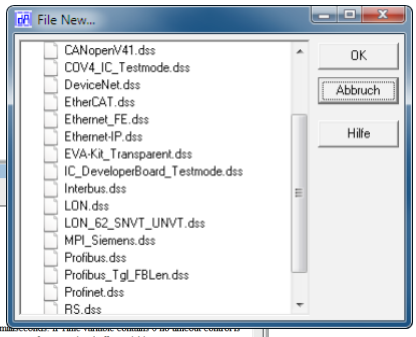

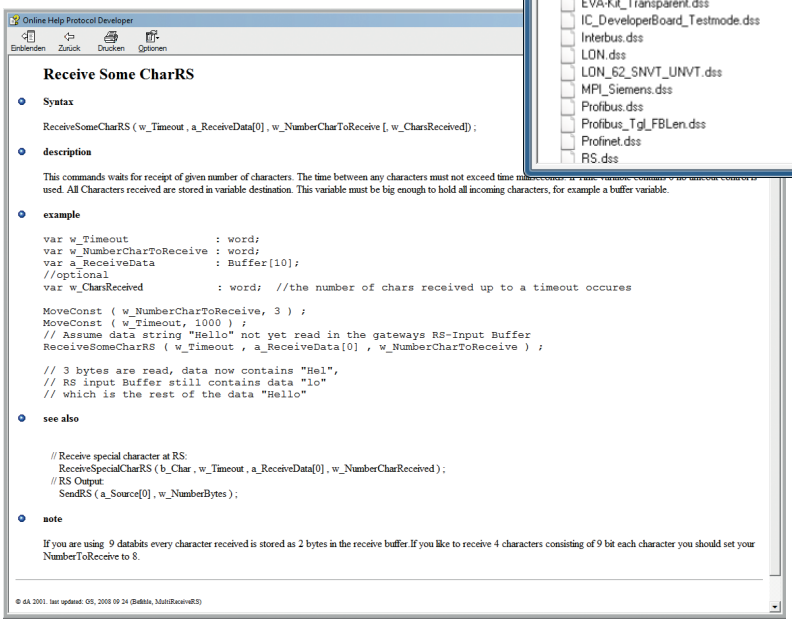

Picture 6: online help

Sample scripts

The free of cost PROTOCOL DEVELOPER includes commented script examples for every script command.

In addition to our free hotline, you'll find further support in form of the latest versions of manuals and software tools available for free on our web page.

(www.deutschmann.com)

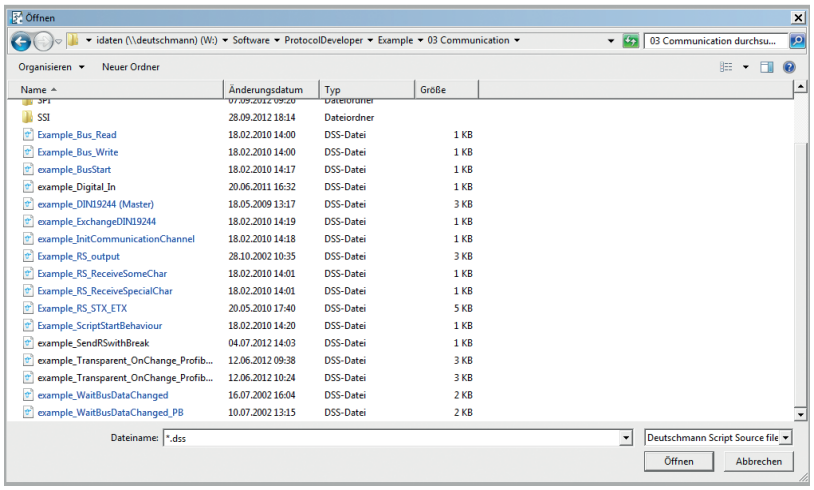

Picture 7: extensive library with example scripts

PROTOCOL DEVELOPER

Advantage Deutschmann – Flexibility

- No changes in your own firmware necessary
- Flexible and powerful script language, specifically created for the bus communication
- Easy to handle
- Customized commands on demand. For example if functions are missing or an optimization for time critical application is needed.
- You can create your own script, or Deutschmann creates your script for you
- Extensive support through help function, templates, examples, hotline and Workshops
- Devices can also be factory fitted with your script
- Scripts run on the UNIGATE® CL, UNIGATE® IC and UNIGATE® FC series
- Easy adaption for existing scripts to more fieldbuses and industrial Ethernet.

UNIGATE® IC Developer-Board

The developer board was developed to ensure the quick implementation of the Deutschmann All-In-One bus node UNIGATE® IC into your own electronics. The unified interface supports all UNIGATE® IC models.

The required operating voltage (depending on the IC design either 5 volts or 3.3 volts) is adjustable.

For the connection to a PC (with the DEBUG interface) there is both, an RS232 port and a USB port available.

The application can be connected either via RS232, RS485, RS422, or USB. To test the respective bus side, bus connections according the norm or market standard are available. The Deutschmann add-on packages (bus master simulation) are optionally available.

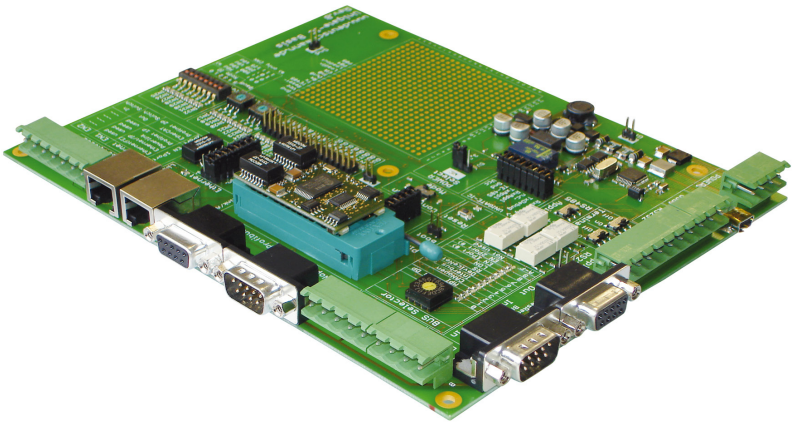

Deutschmann
your ticket to all buses

- **The add-on has been designed to provide a simple master simulation.**
- **The add-on is quick to install and easy to handle.**
- **The included PC software allows to follow, the data exchange through a serial bus window and a bus windows.**
- **Depending on the bus versions there is technical literature included..**
- **Also you can use the existing bus master instead of the add-on.**

Technical overview

BACnet

since II/2013 — 3,3V ◆ Art.-No. V3911

- BACnet/IP interface (server)
- 2x RJ 45 connector (integrated switch)
- 100 Mbit Full-Duplex transmission
- 32-Bit microprozessor

CANopen

5V ◆ Art.-No. V3491

- complete CANopen-Slave-interface
- max. 16 TPDO and max. 16 RPDO process data objects
- Baudrate 10kbit/s to 1 Mbit/s
- isolated CANopen interface
- CANopen Peer-to-Peer Messaging
- 12 K Memory for Script code
- NNumber SDO: 1
- Number use objects: 255
- CAN-Layer 2 Support by Script
- Number errors in errofield: 2
- generic EDS file

CANopen 4X

5V ◆ Art.-No. V3786
3,3V ◆ Art.-No. V3758

- complete CANopen-Slave-interface
- max. 32 TPDO and max. 32 RPDO process data objetcs
- Baudrate 10kbit/s to 1 Mbit/s
- isolated CANopen interface
- CANopen Peer-to-Peer Messaging
- 16 K Memory for Script code
- Number SDO: 2
- Number user objects 65535
- CAN-Layer 2 Support by Script
- Number errors in errorfield: 10
- generic EDS file
- LSS, Script can read all Objects (also 1xxxH)
- 1002H/1004H/1010H/1011H/1201H
- On write by SDO
- SDO-Block-Transfer

DeviceNet

5V ◆ Art.-No. V3264
3,3V ◆ Art.-No. V3800

- complete DeviceNet interface
- max. 255 byte input- and 255 byte output data
- Baud rate 125-500 kbit/s
- isolated DeviceNet interface
- DeviceNet functions: I/O Slave messaging, polling
- generic EDS file

EtherCAT®

3,3V ◆ Art.-No. V3675

- 100 Mbit/s full-Duplex transmission
- isolated EtherCAT interface with 2x RJ45 connector
- supports CANopen communication objects, PDO and SDO
- generic EDS file

EtherNet/IP 1Port

3,3V ◆ Art.-No. V3677

- EtherNet/IP-Adapter function
- max. 500 byte input- and 500 byte output data
- Bus Baudrate 10 and 100 MBaud autodetect
- isolated EtherNet interface with 2x RJ45 connector
- IT functions: Web server, FTP Server
- generic EDS file

EtherNet/IP 2Port

3,3V ◆ Art.-No. V3803

- EtherNet/IP-Adapter function
- max. 500 byte input- and 500 byte output data
- Bus Baudrate 10 and 100 MBaud autodetect
- isolated EtherNet interface with 2x RJ45 connector
- IT functions: Web server, FTP Server
- generic EDS file

Fast Ethernet

5V ◆ Art.-No. V3419
3,3V ◆ Art.-No. V3691

- max. 1024 byte input- and 1024 byte output data
- Baud rate 10 or 100 Mbit/s
- isolated Fast Ethernet interface with 2x RJ45 connector
- IT functions: Web server, FTP server
- memory for filesystem 1 MByte
- IScript and Config-Update only by RS232
- without magnatics: o.r.

Deutschmann
your ticket to all buses

Fast Ethernet FEX

5V ◆ Art.-No. V3722
3,3V ◆ Art.-No. V3766

- max. 1024 byte input- and 1024 byte output data
- Baud rate 10 or 100 Mbit/s
- isolated Fast Ethernet interface with 2x RJ45 connector
- IT functions: Web server, FTP server
- memory for filesystem 1 MByte (o.r. 8MByte)
- Script and Config.-Update by RS232 and FTP
- without magnatics: o.r.
- Server-Side-Include (SSI)
- RAM-Disk
- RAW-mode

LONWorks62

5V ◆ Art.-No. V3458
3,3V ◆ Art.-No. o.r.

- complete LONWorks Slave interface
- max. 512 byte input- and 512 byte output data, 62 In und Out SNVTs
- Baud rate FTT-10A, 78 kBit/s
- isolated LONWorks interface with 4pin. screw connector
- fixed Neuron ID

Modbus TCP

5V ◆ Art.-No. V3722
3,3V ◆ Art.-No. V3766

- complete Modbus- TCP-Slave interface
- max. 252 Byte input- and 252 Byte output data
- isolated Ethernet interface

MPI

5V ◆ Art.-No. V3762
3,3V ◆ Art.-No. V3570

- complete MPI-Slave interface
- max. 92 byte input- and output data
- Baud rate adjustable via script
- isolated MPI interface

Powerlink

3,3V ◆ Art.-No. V3663

- EtherNet Powerlink adapter function
- max. 1541 byte input- and output data
- Baud rate 100 Mbit
- isolated EtherNet Powerlink interface with 2x RJ45-connector
- Node address adjustable via rotary switch
- IT-Function: Web server

General specifications

- serial interfaces 2x UART + 1 x shift register
- Baud rates: 110 Baud to 625KBaud
- Debug interface
- 16K Script memory
- Dimensions: 25 x 45 mm (W x H)
- Weight approx. 150 g
- 32 DIL
- Operating temperature: -40°C to +85°C, RJ variants -25°C to +85°C
- CE and bus-specific certifi cations
- RoHS
- Reach

Technical overview

PROFIBUS

General features:

- complete PROFIBUS-DP-Slave interface
- max. 244 byte input- and 244 byte output, max. 488 byte total
- PROFIBUS address adjustable
- automatical Baud rate recognition (9600 bit/s – 12 Mbit/s)
- isolated PROFIBUS interface with 9-pin. D-sub connector
- generic GSD file

PROFIBUS DPL

5V ◆ Art.-No. V3473
3,3V ◆ Art.-No. V3525

PROFIBUS DPL
without RS485 driver

5V ◆ Art.-No. V3626
3,3V ◆ Art.-No. V3631

PROFIBUS DPL LWL

5V ◆ Art.-No. V3743
3,3V ◆ Art.-No. V3742

Additional features for DPL:

- DPV1 / DPV2 Support
- 2 K Memory for Script code
- 1400 Byte Memory for Script variable
- 32 Byte Buffer for Debug-Interface
- Script-Stacksize: 16 Words
- Size Script-Command: 48 Byte
- 16 Byte PB-Parameter
- 16 Byte PB-config data
- 32 Byte PB-diagnosis
- 256 Byte RS-buffer size
- max. 64 Byte DPV1-buffer size (acyclic)
- overall height in mm: 13

PROFIBUS DPX

5V ◆ Art.-No. V3744
3,3V ◆ Art.-No. V3704

PROFIBUS DPX
without RS485 driver

5V ◆ Art.-No. V3816
3,3V ◆ Art.-No. V3817

Additional features for DPX:

- DPV1 / DPV2 Support
- 16 K Memory for Script code
- 2560 Byte Memory for Script variable
- 128 Byte Buffer for Debug-Interface
- Script-Stacksize: 16 Words
- Size Script-Command: 128 Byte
- 244 Byte PB-parameter
- 128 Byte PB-config data
- 244 Byte PB-diagnosis
- 1 K RS-buffer size
- max. 240 Byte DPV1-buffer size (acyclic)
- overall height in mm: 13
- EEROM for Script variable: 16 K
- Support I & M: IM0
- Support Testmode by software
- Opcode SWITCH

PROFIBUS DPV1

5V ◆ Art.-No. V3218

PROFIBUS DPV1
16K-Scriptmemory

5V ◆ Art.-No. V3629

Additional features for DPV:

- DPV1 / DPV2 Support
- 8 K, optional 16 K Memory for Script code
- 8 K Memory for Script variable:
- 256 Byte Buffer for Debug-Interface
- Script-Stacksize: 256 Words
- Size Script-Command:256 Byte
- 244 Byte PB-parameter
- 128 Byte PB-config data
- 244 Byte PB-diagnosis
- 1 K RS-buffer size
- max. 240 Byte DPV1-buffer size (acyclic)
- overall height in mm: 9
- EEROM for Script variable: 8 K / optional 16 K minus Scriptlength
- Support I & M: IM0
- Support Testmode by software
- Opcode SWITCH

PROFINET

PROFINET 1Port

3,3V ◆ Art.-No. V3625

PROFINET 1Port
without transformer

3,3V ◆ Art.-No. V3627

PROFINET 2Port
without transformer

3,3V ◆ Art.-No. V3804

- complete PROFINET-IO-Device interface (slave)
- max. 1440 byte input and max 1440 output data
- isolated PROFINET interface with 2x RJ45 connector (integrated Switch)
- 100 Mbit Full-Duplex transmission
- 32-Bit microprocessor for fast response time
- generic GSD file

RS

5V ◆ Art.-No. V3517
3,3V ◆ Art.-No. V3736

- complex/proprietary protocol implementation based on RS-interface (232/485/422)
- max. 1024 byte input- und 1024 byte output data
- Modbus RTU/ASCII (master or slave), 3964/3964R and RK512 protocols are supported
- galvanic isolation of the ‘fieldbus’ RS-side

Deutschmann
your ticket to all buses

General specifications

- serial interfaces 2x UART + 1 x shift register
- Baud rates: 110 Baud to 625KBaud
- Debug interface
- 16K Script memory
- Dimensions: 25 x 45 mm (W x H)
- Weight approx. 9 g
- 32 DIL
- Operating temperature: -40°C to +85°C, RJ variants -25°C to +85°C
- CE and bus-specific certifications
- RoHS
- Reach

Deutschmann - product line overview

PROTOCOL CONVERTER UNIGATE® CL – The solution for all devices with a serial interface

- RS232, RS485, RS422, SSI (encoder interface) on board
- standard protocols can be configured (e.g. Modbus RTU, Modbus ASCII, 3964R...), more protocols can be included if needed
- flexible protocol adaption via Deutschmann script language
- module consists of standard components
- designed and manufactured in Germany

UNIGATE® FC - The connectable Multi-Protocol-Module

- easy integration into your own electronics
- module consists of standard components
- connection to your host processor via UART or SPI
- flexible protocol adaption via Deutschmann script language
- standard protocols like Modbus, 3964R, etc. included
- designed and manufactured in Germany

UNIGATE® CX - The flexible Gateway to make incompatible networks compatible

- modular Gateway concept
- currently approx. 120 versions available
- connection to your host processor via UART or SPI
- easy configuration
- wide voltage and temperature range
- designed and manufactured in Germany

UNIGATE® AS-i - The Gateway series AS-i Master to Fieldbuses & industrial Ethernet

- AS-interface profile M-4
- designed for operation of AS-interface Power24V
- quick processing for th acyclic services of CTT1 and CTT2 through one channel for each slave
- AS-interface IC: ASI4U in monitor operation mode
- AS-interface specification V3.0
- designed and manufactured in Germany

ELECTRONIC CAM CONTROLS - Still an essential tool

- diverse devices
- logic functionalities
- dynamic idle time compensation
- short, constant cycle times and a high number of outputs

PriorityChannel

UNIGATE® IC now with PriorityChannel

What is PriorityChannel?

PriorityChannel eliminates the effects of network traffic loading on the device – ensuring accurate cycle-time response and safeguarding against unwanted disconnects. Industrial Ethernet has many network traffic components. In addition to the time critical cyclic messages, there are standard Ethernet messages being routed, Network Management protocols running, and Application Layer sending messages. All of these other components can interfere with the cyclic messages causing them to be delay and introducing jitter.

PriorityChannel is a combination of software optimized on the unique, patented architecture of the fido1100 communication controller to separate non real-time Ethernet traffic from real-time Industrial Ethernet traffic. This is not just a special queue or sophisticated filtering. The silicon provides a separate data pathway and a separate on-chip execution environment for real-time messages to tunnel straight to the device application. Non real-time messages can never interrupt real-time messages making it possible to stay well within 160 µs of the desired EtherNet/IP cycle time, and within 10 µs of the desired Profinet cycle time.

Why do you need PriorityChannel?

Conventional Industrial Ethernet solutions have difficulty dealing with critical messages when network traffic increases, resulting in unpredictable packet delays, excessive latency, or even connection failure. You can't rely on the fact that factory networks will be properly segmented to keep traffic well behaved. Given the flexibility and myriad of capabilities Industrial Ethernet brings to the factory, you don't know how the network will morph over time. How do you know your device will survive?

You need PriorityChannel to protect your device from the uncertainties on the factory floor. Regardless of the network condition or load, PriorityChannel to eliminate the effects of network traffic now and in the future. Critical messages are delivered on-time, every time without packet delays or excessive latency. The bottom line is, Priority Channel ensures your device will never disconnect from the network.

PriorityChannel is a feature of the FIDO products from Innovasic.

Deutschmann
your ticket to all buses

PriorityChannel is integrated in all Deutschmann PROFINET & EtherNet/IP products.

PROFINET®

EtherNet/IP™

Global availability

The company

Deutschmann Automation, a german company based in Bad Camberg is working in the automation technology since 1976 and became known with cam controls in the 1980s.

In 1989 Deutschmann Automation started operating in the fieldbus technology. The development of one's first own bus system DICNET was an essential step. Since 1996 different fieldbus and Industrial Ethernet products are offered under the brand name UNIGATE®.

Thanks to a competent quality management and continuous enhancement Deutschmann became one of the leading suppliers in the automation industry. The entire development and manufacturing takes place in Germany.

We offer workshops for our All-In-One Bus nodes of the UNIGATE® IC series. In these workshops you will learn everything you need to know about our products and how you can easily realize your projects with Deutschmann.

For all products the necessary documents and tools can be found, free of cost, on www.deutschmann.com. The FAQ section summarizes frequently asked questions about our products.

Our experts in development, sales and support have the right solution for your demands..

Deutschmann
your ticket to all buses

UNIGATE® CL
- Protocol converter for all devices with a serial interface

UNIGATE® IC
- Easy integration in your own electronics

UNIGATE® FC
- Connectable Multi-Protocol-Module

UNIGATE® CX
- Making incompatible networks compatible

UNIGATE® AS-i
- AS-i Master M4 to all Fieldbuses and Ethernet

ELECTRONIC
- cam controls

Deutschmann Automation GmbH & Co. KG
Carl-Zeiss-Straße 8
65520 Bad Camberg
Tel.: +49 6434 9433-0
Fax.: +49 6434 9433-40
info@deutschmann.de
www.deutschmann.com