RAK2247 WisLink LPWAN Concentrator Datasheet

Overview

Description

The **RAK2247 WisLink LPWAN Concentrator** is a LoRa Concentrator module with mini-PCIe form factor based on the SX1301. This enables easy integration into routers and other networking equipment, adding gateway capabilities. The module can be used in any embedded platform offering a mini-PCIe slot with an SPI or USB connection.

Despite its small size this is an 8 channel concentrator module. By integrating it together with a computing core a fully fledged gateway solution can easily be created.

Features

- Mini PCIe form factor, mounted heat-sink.
- SX1301 base band processor emulates 49 x LoRa demodulators, 10 parallel demodulation paths. It supports 8 uplinks channel and 1 downlink channel.
- 2 x SX125x Tx/Rx front-ends high/low frequency.
- Built-in FT2232H for SPI to USB 2.0 conversion (optional).
- Operates at 3.3 V, making it compatible with standard 3G/LTE card slots of Mini PCI-e type.
- Tx power up to 27 dBm, Rx sensitivity down to -139 dBm @ SF12, BW 125 kHz.
- Supports global license-free frequency band (EU433, CN470, IN865, EU868, US915, AU915, KR920, and AS923).

Specifications

Overview

The overview shows the top and back view of the RAK2247 board. It also presents the block diagram that discusses how the board works.

Board Overview

The outer dimension of the RAK2247 WisLink LPWAN Concentrator is **50.95 millimeters x 30.0 millimeters x 10.4 millimeters**. The board with top-side and bottom-side keep-out areas, and all other dimension is defined by PCI Express Mini Card Electromechanical Specification except for the card thickness. And the thickness 10.4 millimeters which includes the 8 millimeter heat sink.

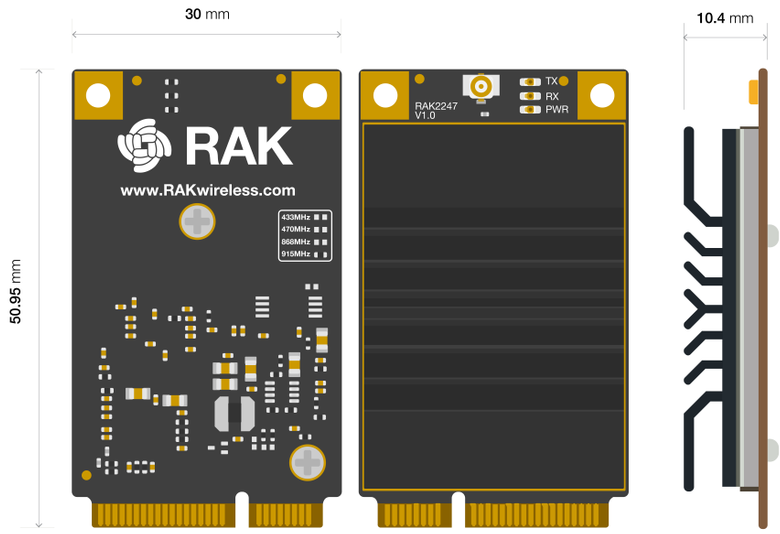

Figure 1: RAK2247 WisLink LPWAN Concentrator Overview

Block Diagram

RAK2247 WisLink LPWAN Concentrator integrates one SX1301 chip and two SX1255/7. The other chip is for RF signal, which represents the core of the device. This provides the related LoRa modem and processing functionalities. Additional signal conditioning circuitry is implemented for PCI Express Mini Card compliance, and one uFL connectors are available for external antennas integration.

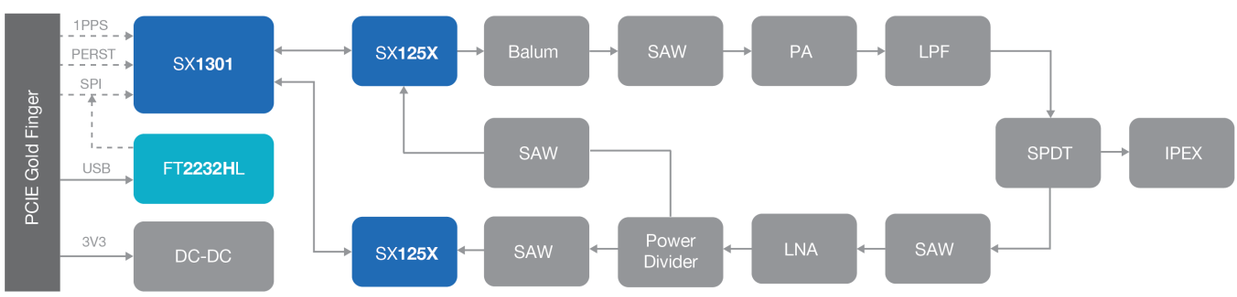

Figure 2: RAK2247 WisLink LPWAN Concentrator Block Diagram

Hardware

The hardware is categorized into six parts. It discusses the interfacing, pinouts and its corresponding functions and diagrams. It also covers the parameters and standard values of the board.

Interface

Power Supply

RAK2247 WisLink LPWAN Concentrator must be supplied through the **3.3Vaux** pins by a **DC power supply**. The voltage must be stable, because during this operation the current drawn from 3.3Vaux can vary significantly, based on the power consumption profile of the SX1301 chip (please refer to **SX1301** datasheet).

SPI Interface

SPI interface is provided on the PCIe*SCK, PCIe* MISO, PCIe*MOSI, PCIe* CSN pins of the system connector. The SPI interface gives access to the configuration register of SX1301 via a synchronous full-duplex protocol. Only the slave side is implemented.

> 📝 **NOTE**
>
> RAK2247-USB version does not have this interface.

USB Interface

RAK2247 WisLink LPWAN Concentrator can support the high speed USB to SPI by FT2232HL, it includes a USB 2.0 compliant interface with maximum 480 Mb/s data rate, representing the interface for any communication with an external host application processor. The module itself acts as a USB device and can be connected to any USB host equipped with compatible drivers. For more information, please refer to the datasheet of FT2232HL.

> 📝 **NOTE**
>
> RAK2247-SPI version does not have this interface.

GPS_PPS

RAK2247 WisLink LPWAN Concentrator includes the GPS_PPS input for received packets time-stamped.

RESET

RAK2247 WisLink LPWAN Concentrator includes the RESET active-high input signal to reset the radio operations as specified by the SX1301 Specification.

LEDs

Three (3) Green LED for indicating the status of **PWR**, **TX**, **RX**.

Antenna RF Interface

The modules have one RF interfaces over a standard uFL connectors (Hirose U. FL-RSMT) with a characteristic impedance of **50Ω**. The RF port (J1) supports both Tx and Rx, providing the antenna interface.

Pin Definition

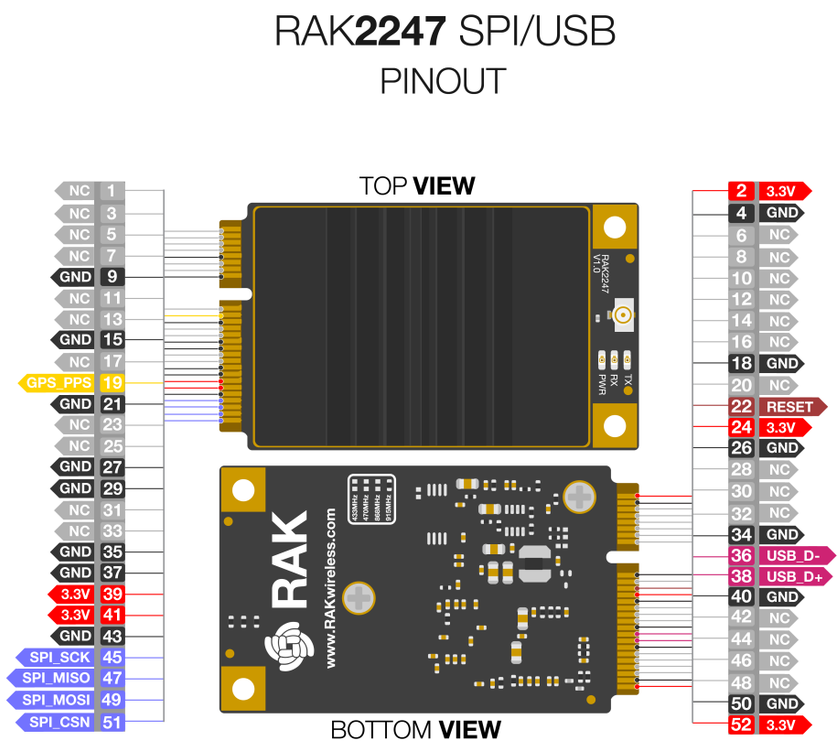

Figure 3: RAK2247 WisLink LPWAN Concentrator Pinout Diagram

Pin #	Mini PCIEx PIN Rev. 2.0	RAK2247 PIN	POWER	I/O	Description	Remarks
1	WAKE#	NC		N/A		Internally not connected
2	3.3Vaux	3.3Vaux	3.3Vaux	N/A	RAK2247 Power Supply Input	Connect to 3.3 volts
3	COEX1	NC		N/A		Internally not connected
4	GND	GND	GND	N/A	Ground	Connect to ground
5	COEX2	NC		N/A		Internally not connected
6	1.5V	NC		N/A		Internally not connected
7	CLKREQ#	NC		N/A		Internally not connected
8	UIM_PWR	NC		N/A		Internally not connected
9	GND	GND	GND	N/A	Ground	Connect to ground
10	UIM_DATA	NC		N/A		Internally not connected
11	REFCLK-	NC		N/A		Internally not connected
12	UIM_CLK	NC		N/A		Internally not connected
13	REFCLK+	NC		N/A		Internally not connected
14	UIM_RESET	NC		N/A		Internally not connected
15	GND	GND	GND	N/A	Ground	Connect to ground
16	UIM_SPU	NC		N/A		Internally not connected
17	UIM/*C* DM	NC (5V Optional For PA)		N/A		Internally not connected
18	GND	GND	GND	N/A	Ground	Connect to ground
19	GPS_PPS	1PPS		N/A		Internal connection GPS_PPS for SX1301

Pin #	Mini PCIEx PIN Rev. 2.0	RAK2247 PIN	POWER	I/O	Description	Remarks
20	W_DISABLE1#	NC		N/A		Internally not connected
21	GND	GND	GND	N/A	Ground	Connect to ground
22	PERST#	RESET		I	RAK2247 reset input	Active high (≥100ns) for SX1301 reset.
23	PERn0	NC		N/A		Internally not connected
24	3.3Vaux	3.3Vaux	3.3Vaux	I	RAK2247 supply input	Connect to 3.3 V
25	PERp0	NC		N/A		Internally not connected
26	GND	GND	GND	N/A	Ground	Connect to ground
27	GND	GND	GND	N/A	Ground	Connect to ground
28	1.5V	NC		N/A		Internally not connected
29	GND	GND	GND	N/A	Ground	Connect to ground
30	SMB_CLK	NC		N/A		Internally not connected
31	PETn0	NC		N/A		Internally not connected
32	SMB_DATA	NC		N/A		Internally not connected
33	PETp0	NC		N/A		Internally not connected
34	GND	GND	GND	N/A	Ground	Connect to ground
35	GND	GND	GND	N/A	Ground	Connect to ground
36	USB_D-	USB_D-	USB	I/O	USB Data Line D-	90Ω nominal differential impedance. Pull-up, pull-down and series resistors as required by USB 2.0 specifications are part of the USB pin driver and need not be provided externally.
37	GND	GND	GND	N/A	Ground	Connect to ground

Pin #	Mini PCIEx PIN Rev. 2.0	RAK2247 PIN	POWER	I/O	Description	Remarks
38	USB_D+	USB_D+	USB	I/O	USB Data Line D+	90Ω nominal differential impedance. Pull-up, pull-down and series resistors as required by USB 2.0 specifications are part of the USB pin driver and need not be provided externally.
39	3.3Vaux	3.3Vaux	3.3Vaux	I	RAK2247 supply input	Connect to 3.3 V
40	GND	GND	GND	N/A	Ground	Connect to ground
41	3.3Vaux	3.3Vaux	3.3Vaux	I	RAK2247 supply input	Connect to 3.3 V
42	LED_WWAN#	NC		N/A		Internally not connected
43	GND	GND	GND	N/A	Ground	Connect to ground
44	LED_WLAN#	NC		N/A		Internally not connected
45	Reserved	PCIe_SCK		I/O	Host SPI CLK	Max 10MHz clock
46	LED_WPAN#	NC		N/A		Internally not connected
47	Reserved	PCIe_MISO		I/O	Host SPI MISO	
48	1.5V	NC		N/A		Internally not connected
49	Reserved	PCIe_MOSI		I/O	Host SPI MOSI	
50	GND	GND	GND	N/A	Ground	Connect to ground
51	W_DISABLE2#	PCIe_CSN		I/O	Host SPI CS	
52	3.3Vaux	3.3Vaux	3.3Vaux	I	RAK2247 supply input	Connect to 3.3 V

RF Characteristics

Operating Frequencies

The board supports the following LoRaWAN frequency channels, allowing easy configuration while building the firmware from the source code.

Region	Frequency (MHz)
Europe	EU433, EU868
China	CN470
North America	US915
Asia	AS923
Australia	AU915
Korea	KR920
Indian	IN865

RF Characteristics

The following table gives typically sensitivity level of the RAK2247 WisLink LPWAN Concentrator.

Signal Bandwidth [KHz]	Spreading Factor	Sensitivity [dBm]
125	12	-139
125	7	-125
250	12	-136
250	7	-123
500	12	-134
500	7	-120

Electrical Requirements

Exceeding the device's rating on one or more listed in the Absolute Maximum Rating section may cause permanent damage. These are stress ratings only. Operating the module at these or at any conditions other than those specified in the Operating Conditions sections of the specification should be avoided. Exposure to Absolute Maximum Rating conditions for extended periods may affect device reliability. The operating condition range define those limit within which the functionality of the device is guaranteed. Where application information is given, it is advisory only and does not form part of the specification.

Absolute Maximum Rating

Limiting values given below are in accordance with the Absolute Maximum Rating System (**IEC 134**)

Symbol	Description	Condition	Min.	Max.
3.3Vaux	Module supply voltage	Input DC voltage at 3.3Vaux pins	– 0.3V	3.6V
USB	USB D+/D- pins	Input DC voltage at USB interface pins		3.6V
RESET	RAK2247 reset input	Input DC voltage at RESET input pin	– 0.3V	3.6V
SPI	SPI interface	Input DC voltage at SPI interface pin	– 0.3V	3.6V
GPS_PPS	GPS 1 pps input	Input DC voltage at GPS_PPS input pin	– 0.3V	3.6V
Rho_ANT	Antenna ruggedness	Output RF load mismatch ruggedness at ANT1		10:1 VSWR
Tstg	Storage Temperature		– 40°C	85°C

⚠️ **WARNING**

The product is not protected against over voltage or reversed voltages. If necessary, voltage spikes exceeding the power supply voltage specification, given in table above, must be limited to values within the specified boundaries by using appropriate protection devices

Maximum ESD

The table below lists the maximum ESD.

Parameter	Min	Typical	Max	Remarks
ESD sensitivity for all pins except ANT1			1000V	Human Body Model according to JESD22-A114
ESD sensitivity for ANT1			1000V	Human Body Model according to JESD22-A114
ESD immunity for ANT1			4000V	Contact Discharge according to IEC 61000-4-2
			8000V	Air Discharge according to IEC 61000-4-2

📝 **NOTE**

RAK2247 WisLink LPWAN Concentrator is an Electrostatic Sensitive Device and require special precautions when handling.

Power Consumption

Mode	Condition	Min.	Typical	Max.
Active-Mode(TX)	The power of TX channel is 25dBm and 3.3V supply.		789 mA	
Active-Mode(RX)	TX disabled and RX enabled.		422 mA	

Power Supply Range

The table below lists the power supply range.

Input voltage at **3.3Vaux** must be above the normal operating range minimum limit to switch-on the module.

Symbol	Parameter	Min.	Typical	Max.
3.3Vaux	Module supply operating input voltage14	3 V	3.3 V	3.6 V

Environmental Requirements

Operating Conditions

The table below lists the operation temperature range

Parameter	Min.	Typical	Max.	Remarks
Normal operating temperature	-40°C	+25°C	+85°C	Normal operating temperature range (fully functional and meet 3GPP specifications)

> 📝 **NOTE**
>
> Unless otherwise indicated, all operating condition specifications are at an ambient temperature of 25°C. Operation beyond the operating conditions is not recommended and extended exposure beyond them may affect device reliability.

Schematic Diagram

RAK2247 card refers to Semtech's reference design of SX1301. The SPI interface or USB interface converts SPI to USB2.0 by FT2232H and can be used on PCIE connector.

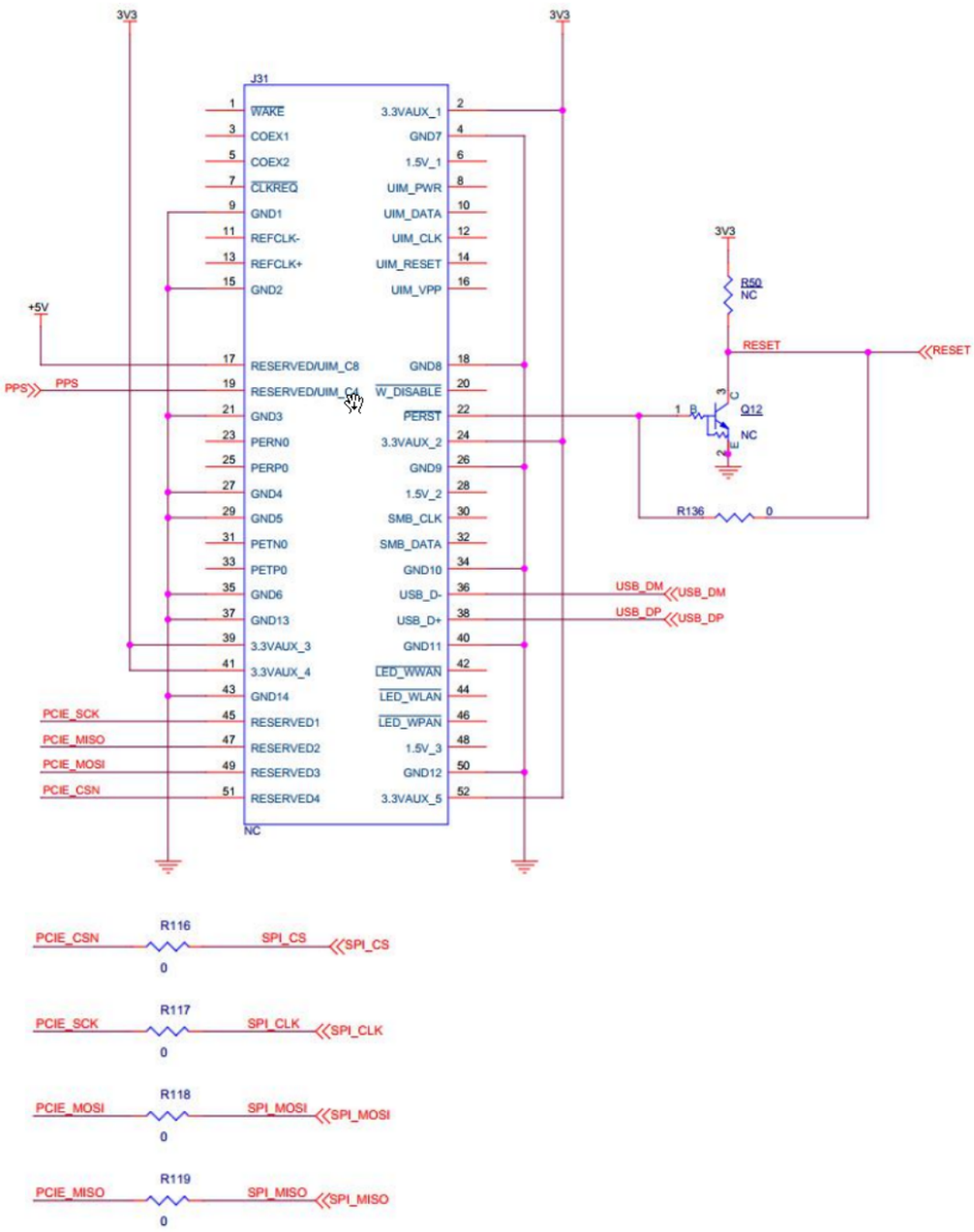

Figure 4: RAK2247 Schematic Diagram

The figure below shows the minimum application schematic of the RAK2247 card. You should use it at least 3.3V / 1A DC power, connect the SPI interface or USB interface to the main processor.

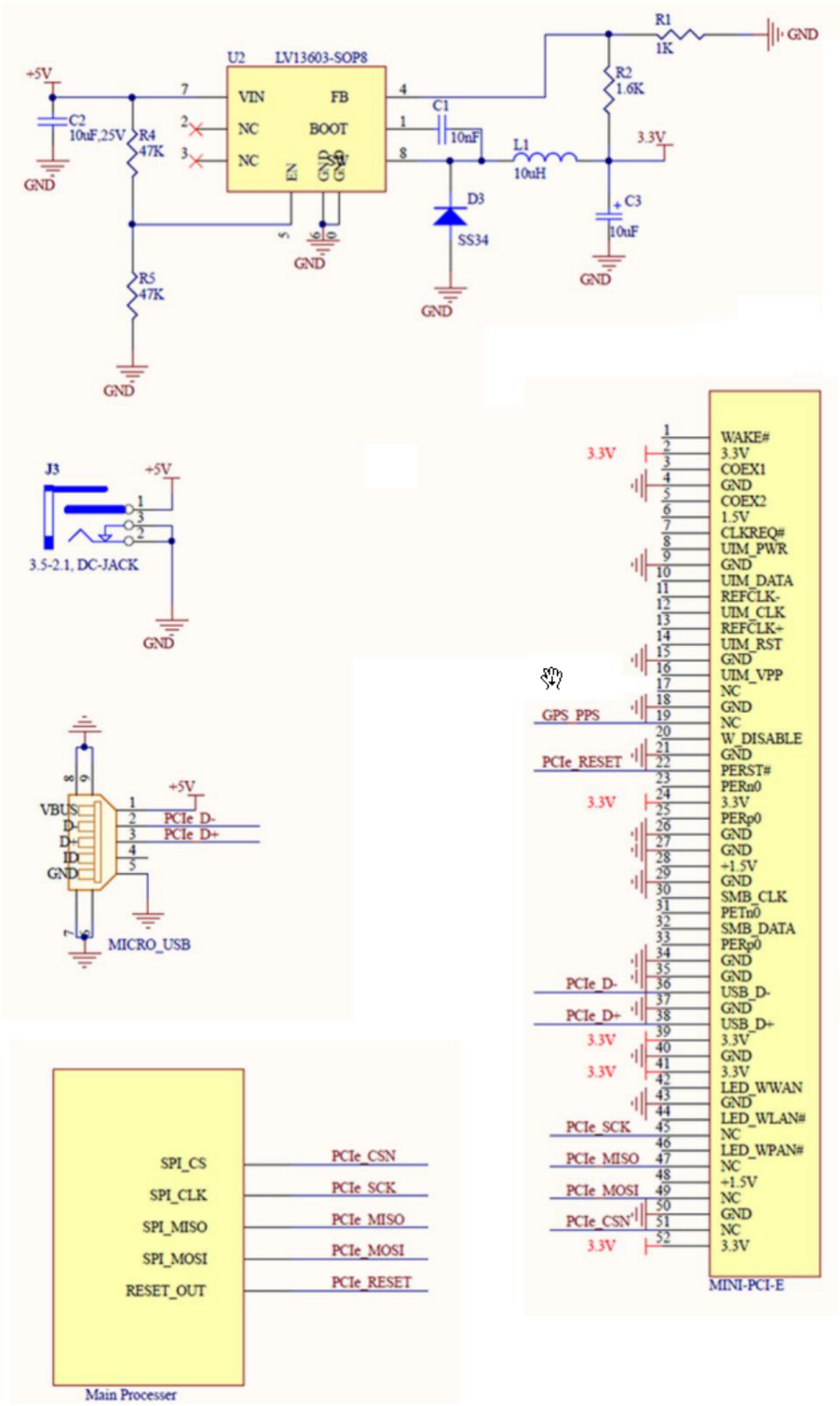

Figure 5: RAK2247 Card Minimum Schematic Reference

Software

Firmware

Model	Raspberry Pi Board	Firmware Version	Source
RAK2247 - SPI	Raspberry Pi 3B+, 4	V4.2.5R	Download
RAK2247 - USB	Raspberry Pi 3B+, 4	V4.2.5R	Download

Models / Bundles

Order Information

Part Number	Description
RAK2247-01-R01	SPI-EU433
RAK2247-02-R01	SPI-CN470
RAK2247-03-R01	SPI-EU868
RAK2247-04-R01	SPI-915
RAK2247-05-R01	SPI-KR920
RAK2247-06-R01	SPI-AS923
RAK2247-07-R01	SPI-IN865
RAK2247-11-R01	USB-EU433
RAK2247-12-R01	USB-CN470
RAK2247-13-R01	USB-EU868
RAK2247-14-R01	USB-915
RAK2247-15-R01	USB-KR920
RAK2247-16-R01	USB-AS923
RAK2247-17-R01	USB-IN865

Certification

Last Updated: 6/16/2021, 2:53:44 PM